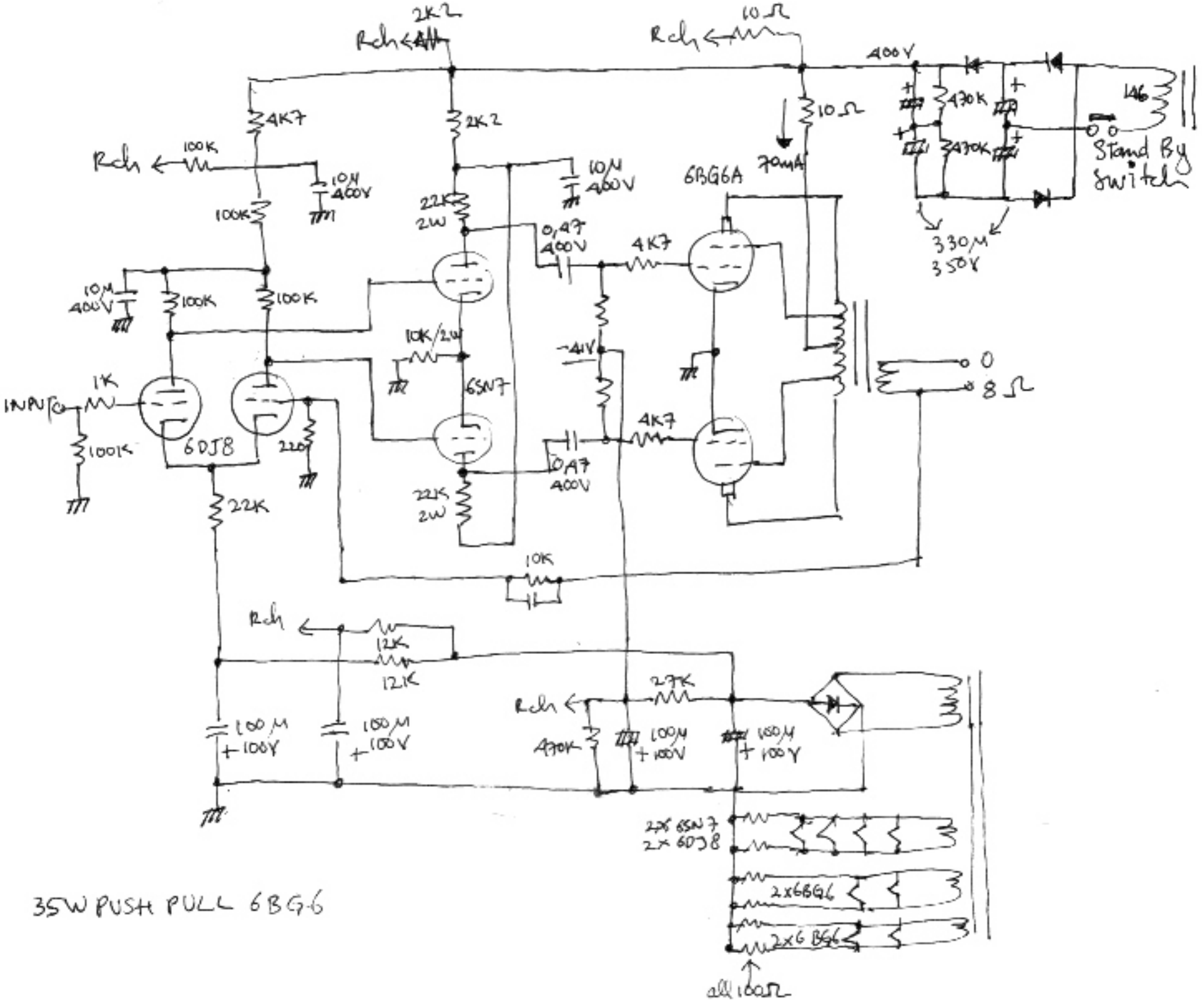

35W PUSH PULL 6BG6